Antec

SHIFT

Vertical GPU bracket with PCI-E 4.0 riser cable

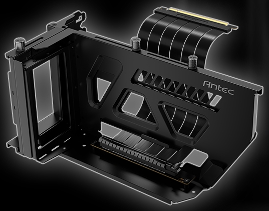

Shift Black

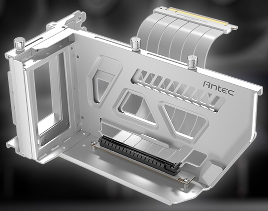

Shift White

SHOWCASE YOUR GLARING GRAPHICS CARD VERTICALLY

Compatible with graphics cards of any length and up to 3-slot wide.

PCI-E 4.0 RISER CABLE

Perfectly compatible with the latest GPU **up to RTX 4090** . 190mm long, which is the most ideal length of cable to pair with the bracket that prevents poor performance or insufficient space.

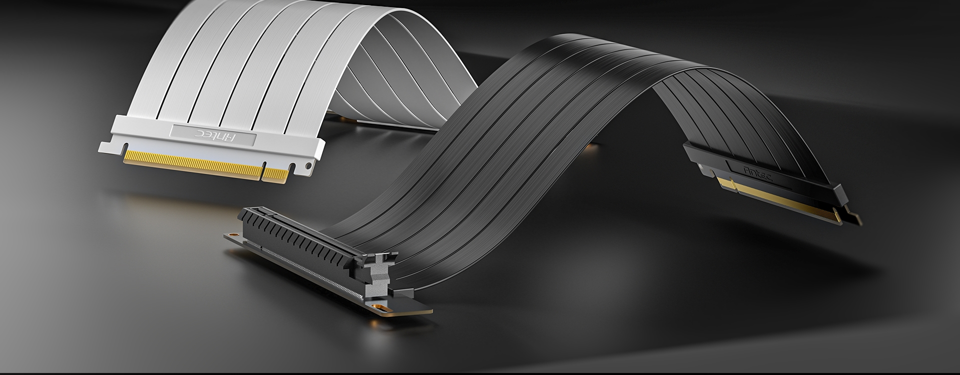

TOOL-FREE MULTI-DIRECTIONAL ADJUST

53mm horizontally and 33mm towards the side panel.

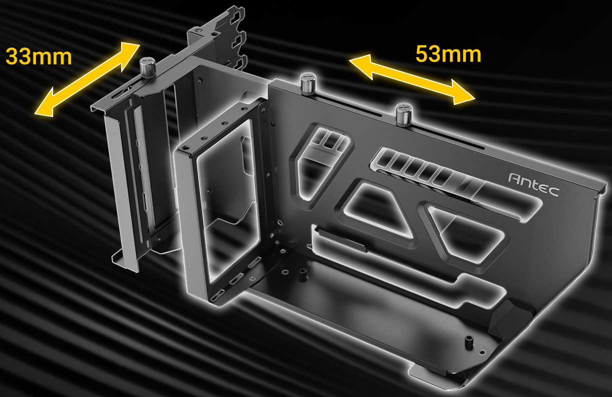

SUPPORTS ALL STANDARD E-ATX & ATX CHASSIS

Fit all types of PCI slot.

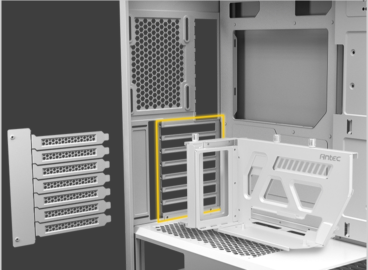

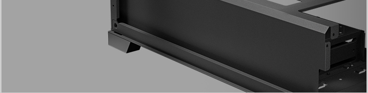

Fully-Open Expansion Slot

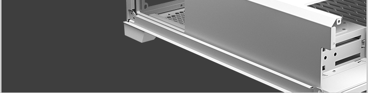

Traditional Expansion Slot

SUPPORTS ALL STANDARD M-ATX CHASSIS

- At least 4 PCI slots
- Remove rear fan if necessary
- Max. CPU cooler height: 70mm

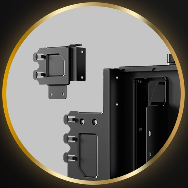

Remove the small iron piece to mount the bracket on M-ATX cases.

REPUBLIC OF GAMERS

VERTICAL SUPPORT BRACE

54mm of adjustable range to reach the bottom of huge cases.

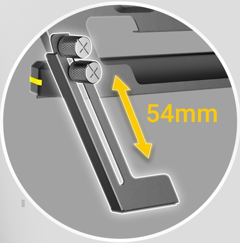

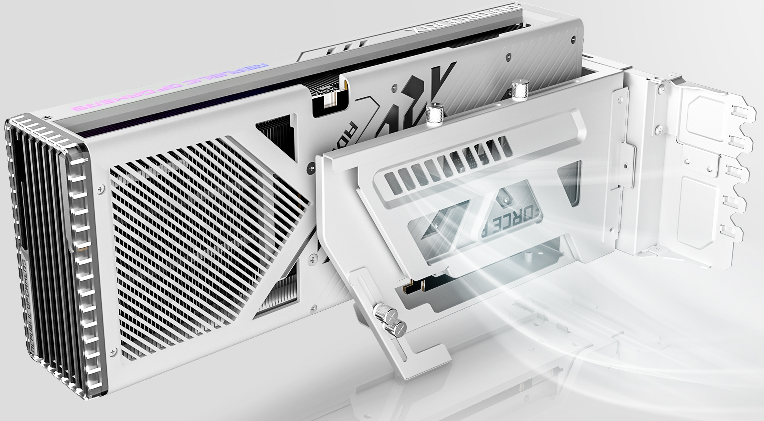

BEST GPU COOLING DESIGN

Cut-out vent holes facilitate heat dissipation and avoid blocking the airflow.

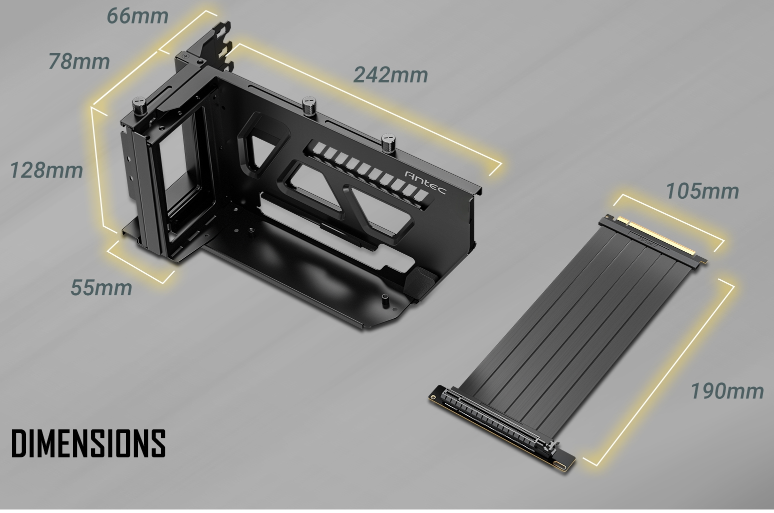

DIMENSIONS

SPECIFICATION

Model Name	
Shift Black	AT-ARCVB-BK190-PCIE4-RTX40
Shift White	AT-ARCVB-W190-PCIE4-RTX40

GPU Bracket	
Color	Black / White
Dimensions	284.1(L) x 145(W) x 133.1(H) mm (close) 337.6(L) x 178(W) x 195.6(H) mm (open)
Supported Chassis Type	E-ATX, ATX, Micro ATX(Conditional)
Supported Graphics Cards	Max. 3 slots wide
PCI Slot Number	Min. 4 PCI slots required

Riser Cable	
Color	Black / White
Cable Length	190 mm
PCIe Standard	PCIe 4.0 x 16
Compatibility	PCIe 4.0 and older
Rated Voltage	DC 12V
Rated Current	5A

General	
Net Weight	0.82kg
Gross Weight	1.01kg
Warranty	1 year
UPC#	0-761345-77799-5 Shift Black 0-761345-77800-8 Shift White